Memories

Dr. Ahmed Samir

asamir@cu.edu.eg

Department of Electronics and Electrical Communications

Faculty of Engineering

Cairo University

Fall 2022

Objectives

- The main objective of this part of the course is to get an introduction to the structure and operation of different memories
- Why do we need memories
- How are memories different from normal logic
- Why memories differ the way they do
- Why are speed and density requirements so hard to achieve
- Why accessory circuits are as important as the cell itself

Topics covered

- General considerations in memory design
- NOR ROM array
- NAND ROM array
- Delay in NAND and NOR ROMs
- SRAM cell
- Sense amplifiers
- SRAM access cycle
- Transistor DRAMs

Reference

- “Digital Integrated Circuits” Jan Rabaey

- Handbook of Digital CMOS Technology, Circuits, and Systems
  - Downloading the book: https://link.springer.com/book/10.1007/978-3-030-37195-1

About the book

- We will only use chapter 12 of the book, specifically: 12.1, 12.2, 12.3, 12.5, 12.6, 12.7, 12.8

General considerations in memory design

- Why memories are needed?
- How memories differ from normal logic
- The array structure
- List of accessory circuits
- Access cycle

MEMORY ARCHITECTURE

WHAT IS A MEMORY

- A very large collection of storage locations
- Extremely high density with very high focus on area per cell
- Shared access through a bus

ARCHITECTURE OF A LINEAR MEMORY

- Locations share the bus through a MUX
- A read/write memory has busses:
  - Data in
  - Data out
  - WE
  - address
  - clk
- A port defined by address bus

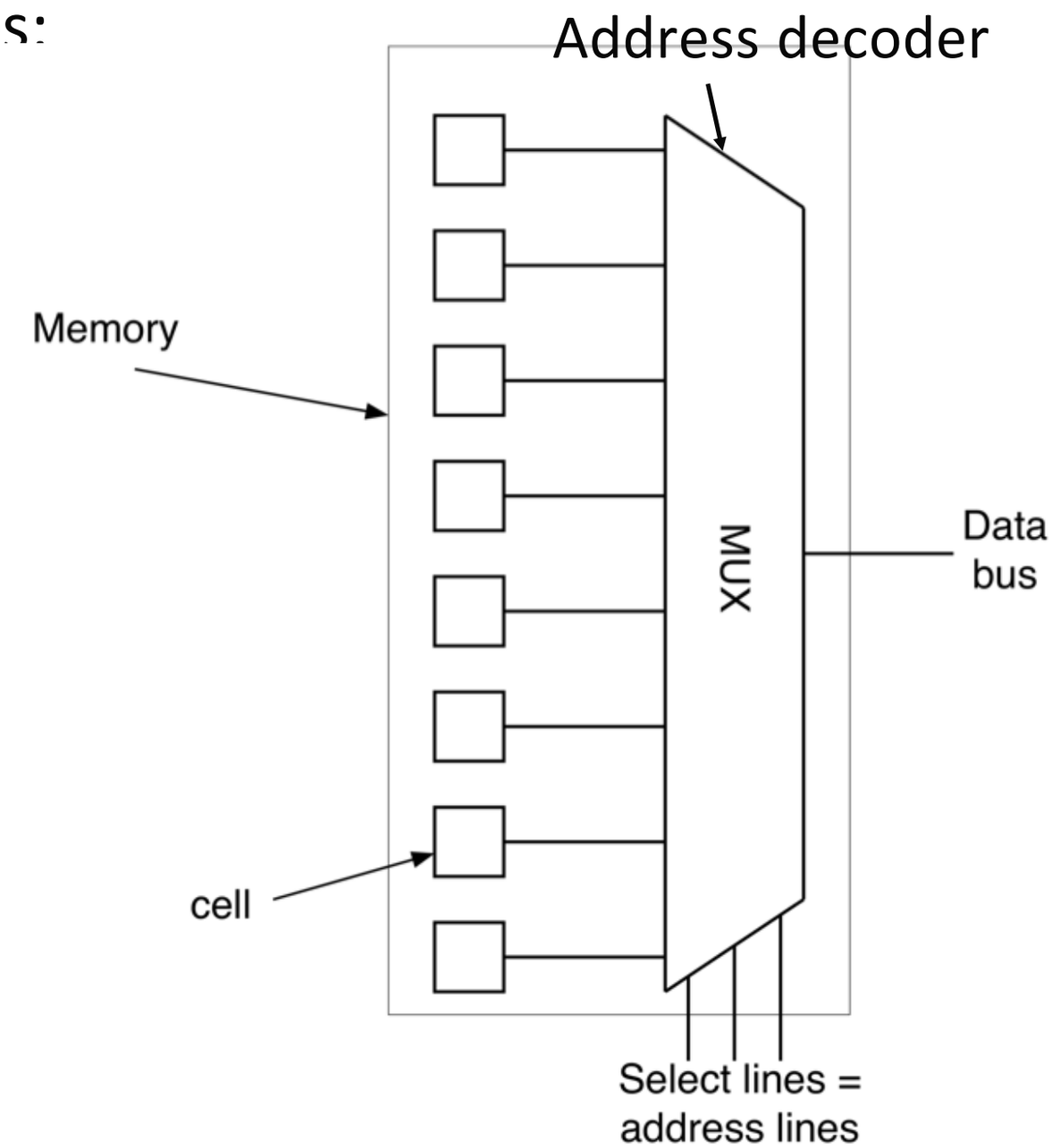

MULTIPORT MEMORIES

- Same memory core
- Separate decoders
- Separate address busses
- 8 location memory
  - 3-bit address
- 1 bit data

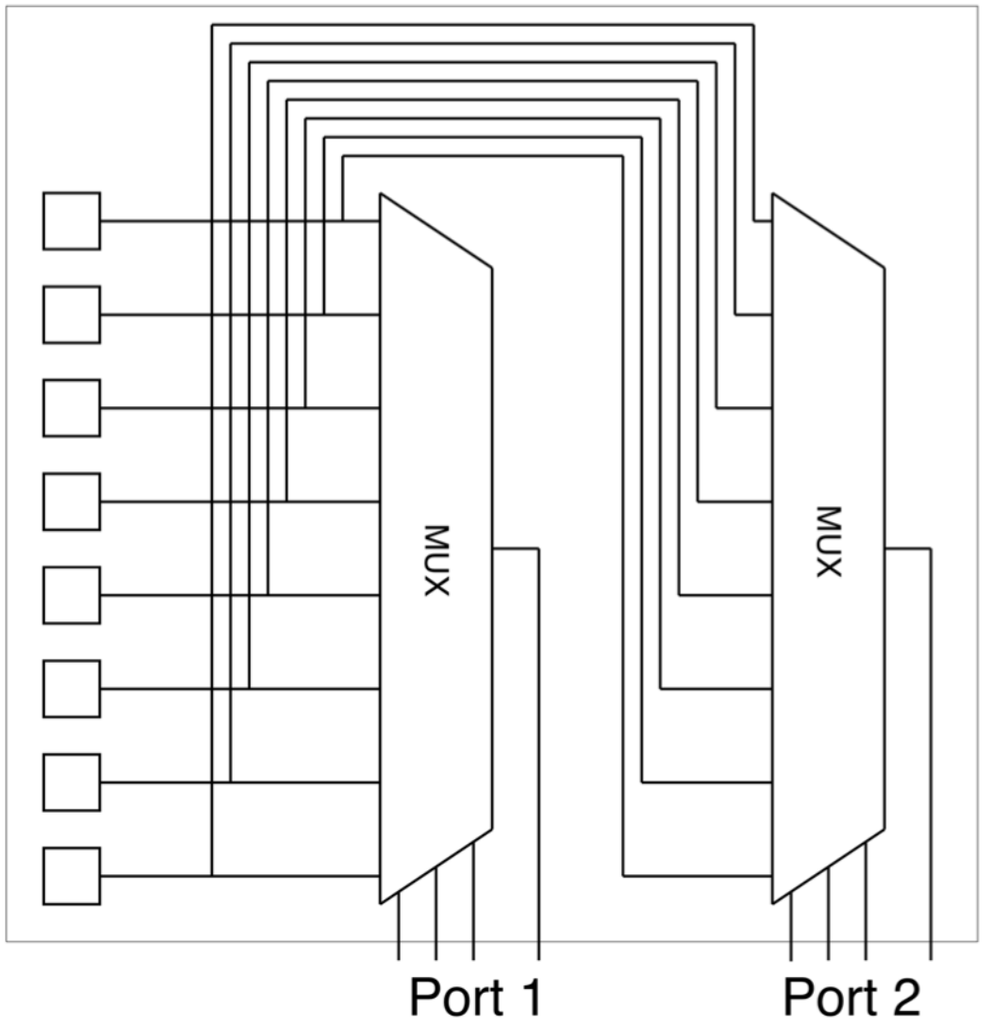

CLASSIFICATION OF MEMORIES

- Synchronicity: asynchronous memories are faster but harder to design
- Volatility: Whether or not data is preserved when supply is removed
- Storage mechanism: Whether data is stored statically (in positive feedback loops) or dynamically on capacitors
- Writeability
- Reading mechanism: Can read using static loads or precharged loads
- Integration: Only SRAMs are typically integrated on-chip

CLASSIFICATION OF MEMORIES

Memory	Storage	Volatility	Writability
ROM	Static	Non-volatile	Read-only
Flash	Static	Non-volatile	Writeable
SRAM	Static	Volatile	Writeable
DRAM	Dynamic	Volatile	Writeable

PHILOSOPHY OF MEMORY DESIGN

- Memories are entirely focused on density and speed
  - Need the most amount of storage in the least possible area
  - Most applications are limited by memory bandwidth
- Linear memories scale horribly
  - Decoder size
  - Aspect ratio
    (area inefficient and larger delays)

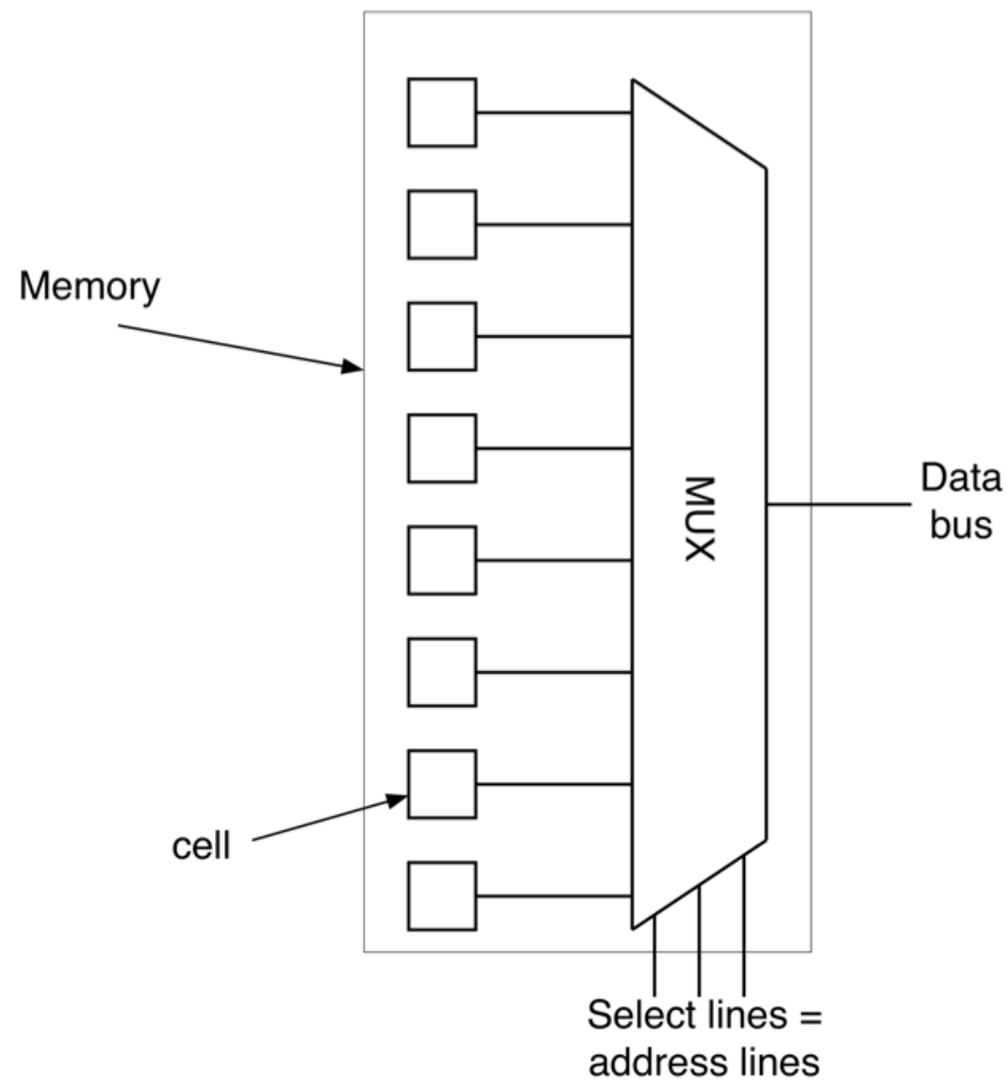

RECTANGULAR MEMORIES

- Cells arranged in rows (word lines) and columns (bit lines)
- 2^k*2^m locations
- k lines to row address decoder
- m lines to column address decoder
- Address = k+m bits

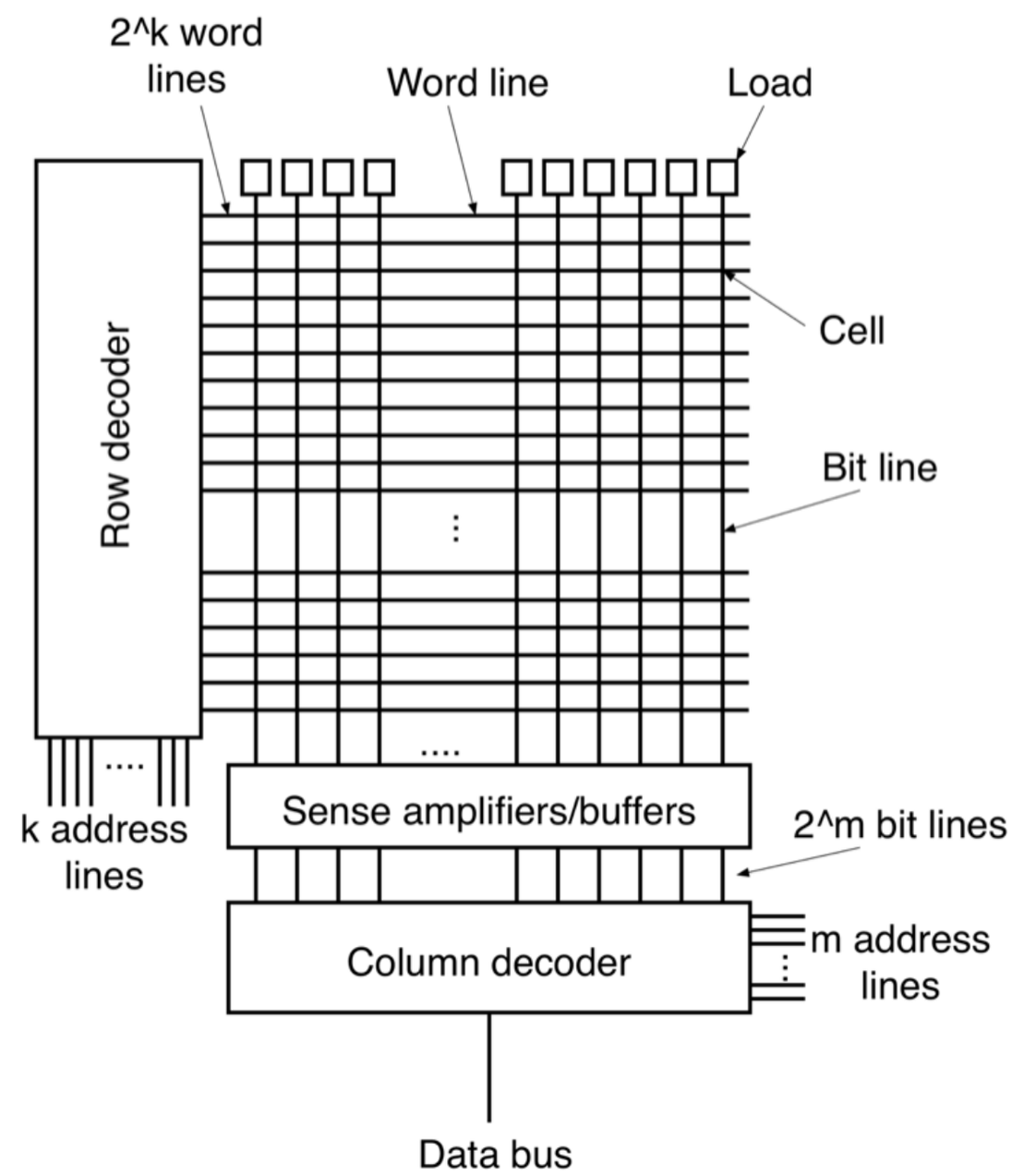

ACCESSORY CIRCUITS

- Row decoder: true decoder that activates 1 out of 2^k lines
- Column decoder: MUX that chooses 1 out of 2^m lines
- Sense amplifiers: Essential circuits used to resolve the area-delay dilemma of memories
- Drivers: Used to drive the words to be written in writeable memories

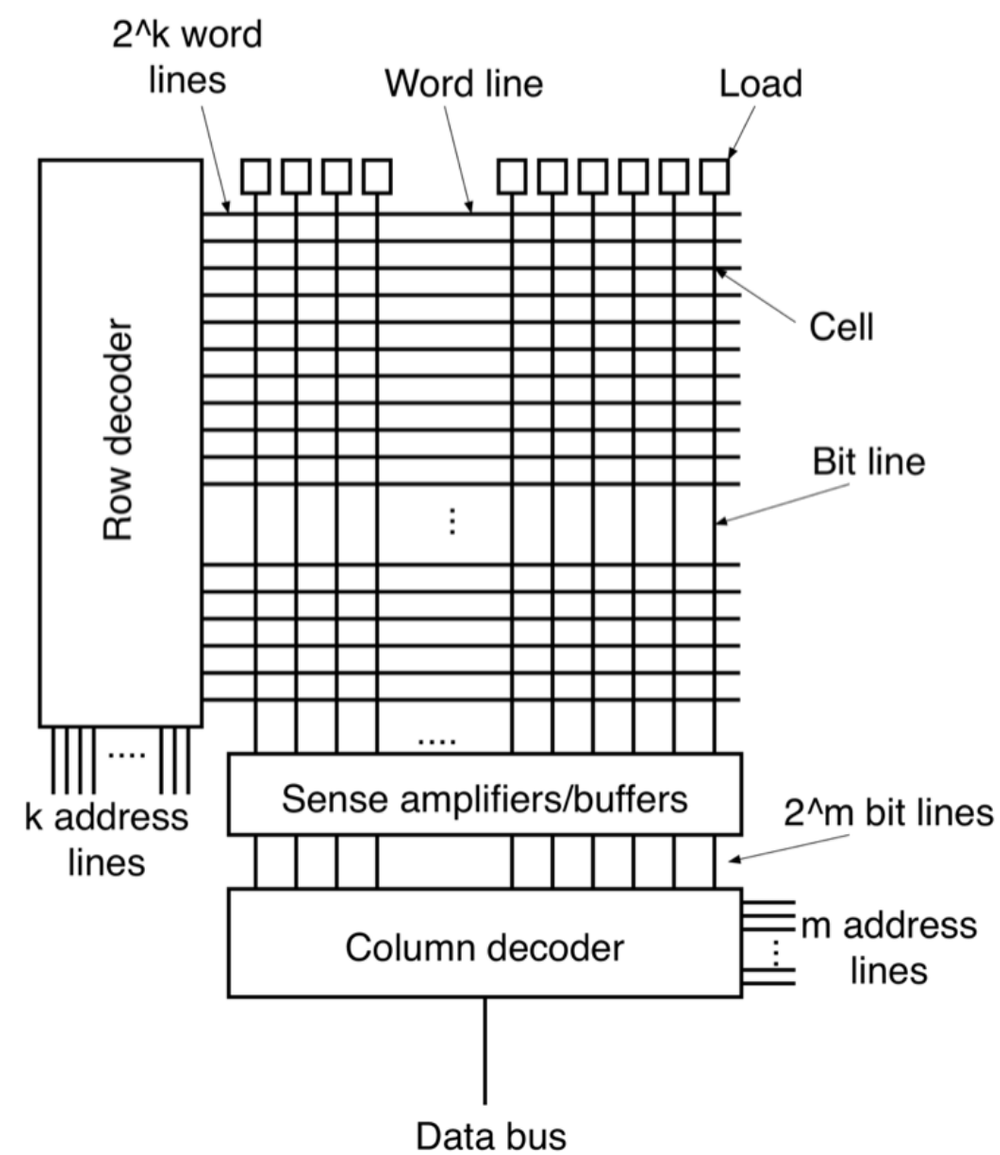

LARGE MEMORIES
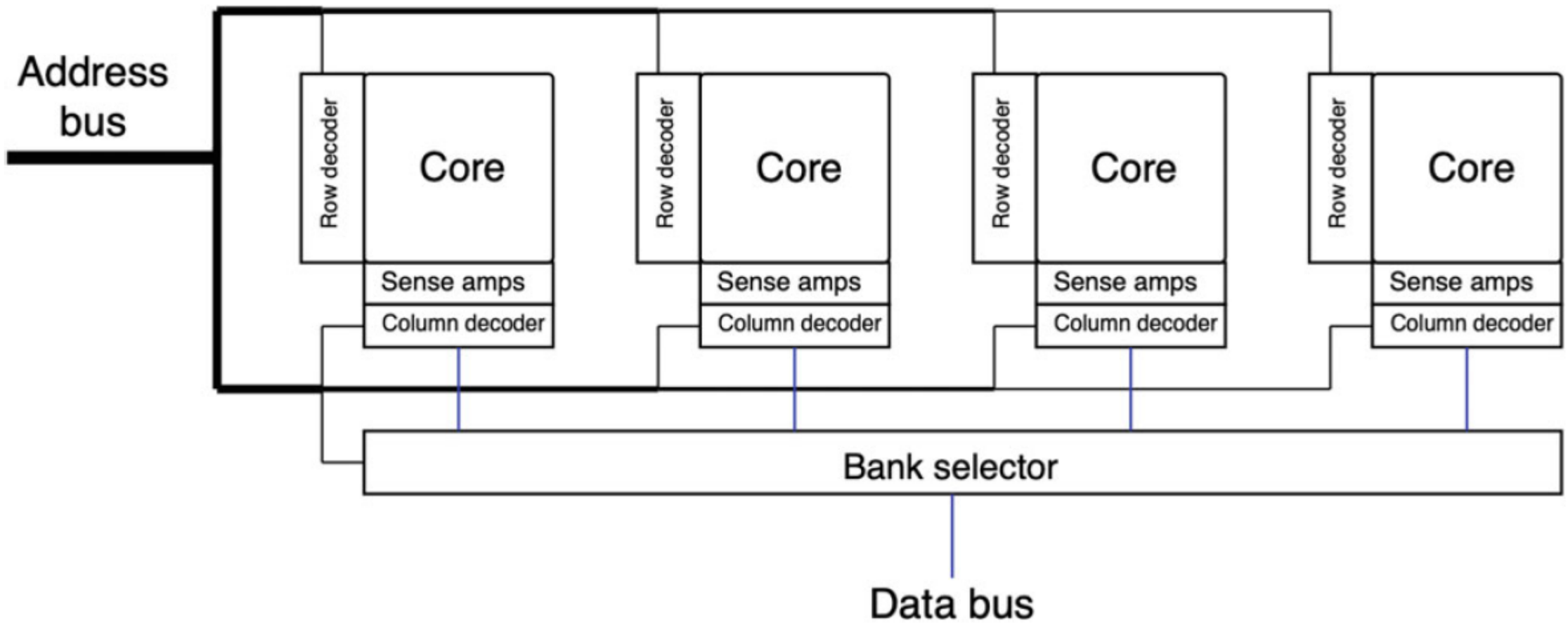
- Very large memories consist of 2-D arrays
- Each array is a bank (Single memory).
- Column decoder is shared, and further bank multiplexing is added